Instrumentation Amplifier

Dylan Thornburg and Idrees Al-Khalidi

Topology

- Contains three op-amps: Two non-inverting amplifiers that connect to both inputs of 1 differential amplifier

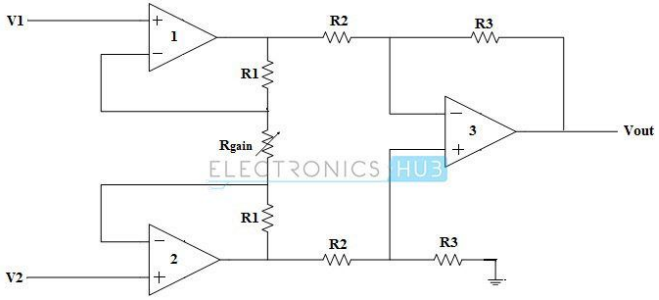

A Typical Three Op-amp Instrumentation Amplifier

Topology

- The negative feedback of the two op amps to the left leads to the voltage at points G and H to be equal to the input voltages V_1 and V_2, respectively.
- The voltages from points G and H create a current that flows through R_{gain} and both R_1 resistors
- The differential output voltage from the two non-inverting amplifiers on the left side can be written as $(V_{o,1} - V_{o,2}) = (2R_1 + R_{gain})(V_1-V_2)/R_{gain}$ and the differential amplifier's output can be written as $V_{out} = (R_3/R_2)(V_{o,1}-V_{o,2})$

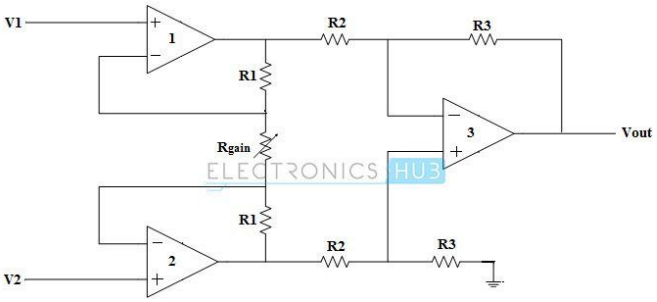

A Typical Three Op-amp Instrumentation Amplifier

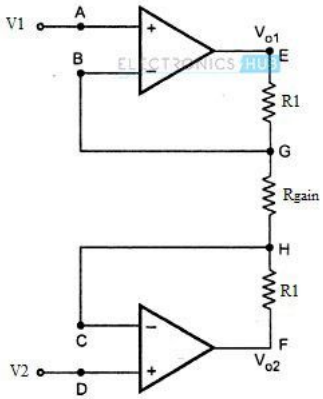

Input Stage of Instrumentation Amplifier

Topology

- Combining both equations: $V_{out} = (R_3/R_2)[(2R_1 + R_{gain})/R_{gain}](V_1-V_2)$
- Gain = A_v $= (R_3/R_2)((2R_1 + R_{gain})/R_{gain})$
- If all of the resistors besides R_{gain} are the same value R: $V_{out} = (V_1-V_2)(1+2R/R_{gain})$

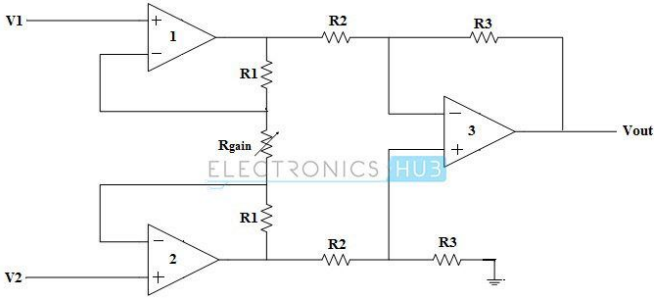

A Typical Three Op-amp Instrumentation Amplifier

Advantages

- Gain can be adjusted by varying one resistance value: R_{gain}
- The input impedance is determined by the inputs of the two non-inverting amplifiers, which have high input impedance while having the low output impedance of a differential amplifier
- High CMRR

Applications

- By implementing a transducer bridge at the input of both non-inverting amplifiers, can be used as a data acquisition device for measuring data such as temperature and light
- A resistive bridge is balanced at a specific temperature, resulting in an equal voltage to both inputs of the non-inverting amplifiers. When the temperature changes, the thermistor’s resistance changes, resulting in a nonzero differential input voltage, which causes the temperature controller to turn on to adjust the temperature to balance the resistive bridge once again. The resistive bridge is balanced when Va and Vb have an equal voltage

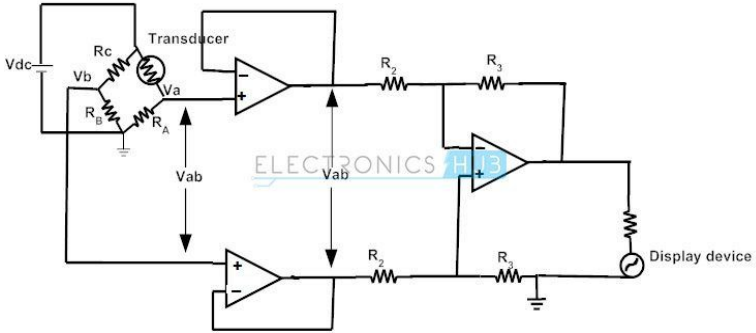

Applications

- This same system layout can be used for a light detector, by using a light-dependent resistor (LDR) instead of a thermistor. The resistive bridge is balanced when there is no light shined on it.
- Biomedical devices that require high input impedance, such as blood pressure monitors and ultrasound devices
    - Also, instrumentation amplifiers are useful for blocking the large amount of noise that is present in hospitals due to the amount of electrical systems being used in the building from lights, medical devices, computers, etc.

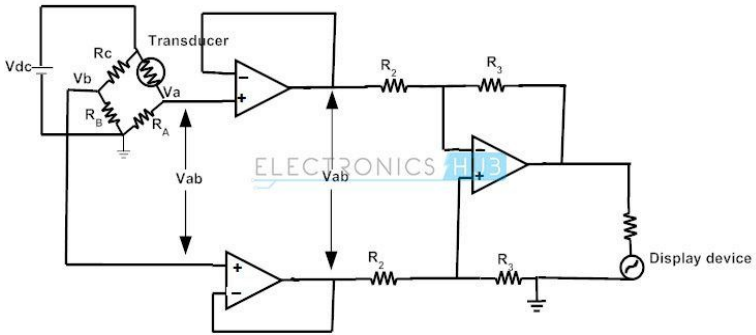

Ways to test performance

- 1) CMRR = common mode rejection ratio = ability to reject common-mode signal
- 2) Nonlinearity: The graph of V_{in} vs (V_{out}/Gain) can be nonlinear (shown to the right)

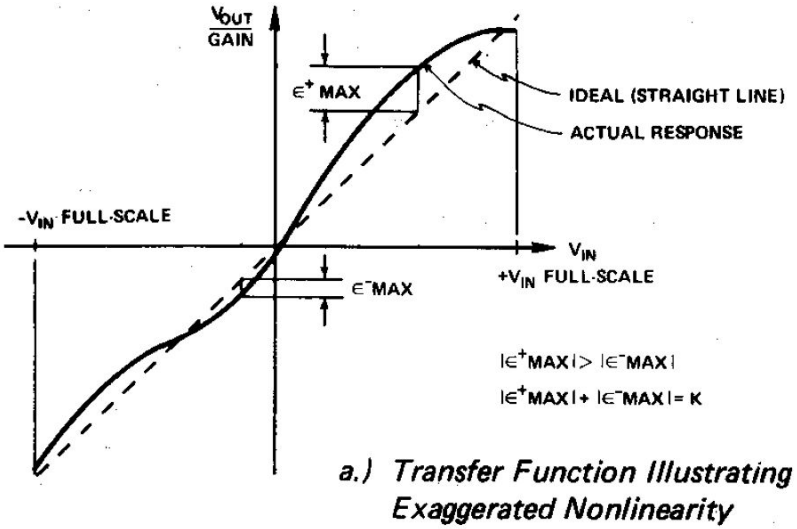

a.) Transfer Function Illustrating Exaggerated Nonlinearity

Ways to test performance

- One method to fix this is the “best straight line” method, in which the biggest difference in (V_{out}/Gain) for V_{in} > 0 and for V_{in} < 0 are measured and the gain and offset are changed to make these equal to each other

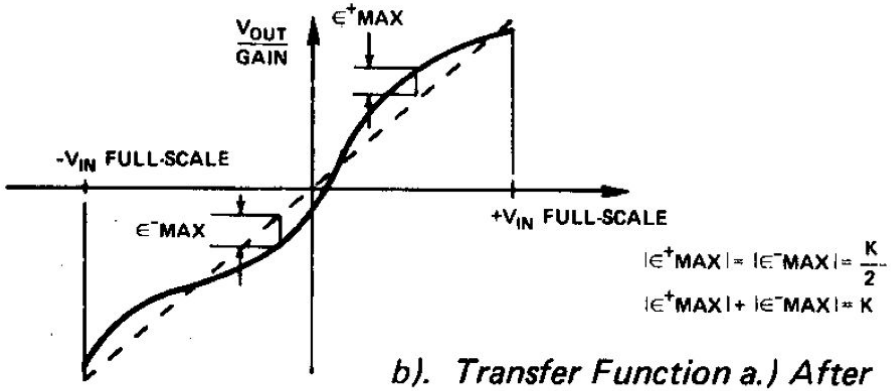

b). Transfer Function a.) After Calibration by Best-Straight-Line Method

Sources

- https://www.electronicshub.org/instrumentation-amplifier-basics-applications/
- https://www.allaboutcircuits.com/textbook/semiconductors/chpt-8/the-instrumentation-amplifier/#:~:text=What%20Is%20an%20Instrumentation%20Amplifier,adjustment%20of%20multiple%20resistor%20values
- https://www.allaboutcircuits.com/technical-articles/practical-uses-of-instrumentation-amplifiers/